Ulaby Chapter 4

4.19 Three infinite lines of charge, all parallel to the z-axis, are located at the three corners of the kite-shaped arrangement shown in Fig. P4.19. If the two right triangles are symmetrical and of equal corresponding sides, show that the electric field is zero at the origin.

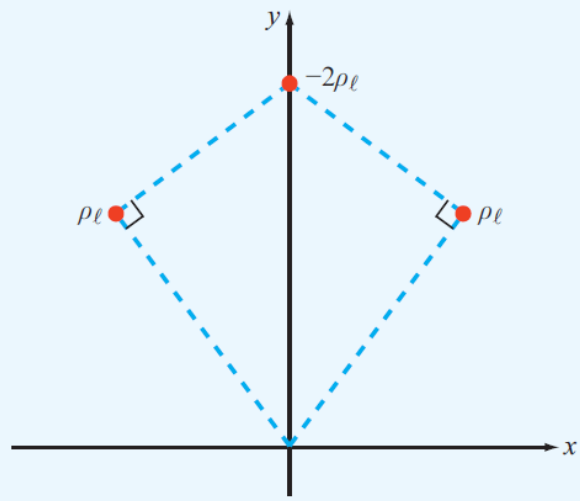

Figure P4.19 Kite-shaped arrangment of line charges for Problem 4.19.

Solution: The field due to an infinite line of charge is given by Eq. (4.33). In the present case, the total $\mathbf{E}$ at the origin is

$$\mathbf{E} = \mathbf{E}_1 + \mathbf{E}_2 + \mathbf{E}_3.$$

The components of $\mathbf{E}_1$ and $\mathbf{E}_2$ along $\hat{\mathbf{x}}$ cancel and their components along $-\hat{\mathbf{y}}$ add. Also, $\mathbf{E}_3$ is along $\hat{\mathbf{y}}$ because the line charge on the y-axis is negative. Hence,

$$\mathbf{E} = -\hat{\mathbf{y}}\,\frac{2\rho_l \cos\theta}{2\pi\varepsilon_0 R_1} + \hat{\mathbf{y}}\,\frac{2\rho_l}{2\pi\varepsilon_0 R_2}\,.$$

But $\cos\theta = R_1/R_2$. Hence,

$$\mathbf{E} = -\hat{\mathbf{y}}\,\frac{\rho_l}{\pi\varepsilon_0 R_1}\,\frac{R_1}{R_2} + \hat{\mathbf{y}}\,\frac{\rho_l}{\pi\varepsilon_0 R_2} = 0.$$

4.21 A horizontal strip lying in the x–y plane is of width d in the y-direction and infinitely long in the x-direction. If the strip is in air and has a uniform charge distribution ρ_s, use Coulomb's law to obtain an explicit expression for the electric field at a point P located at a distance h above the centerline of the strip. Extend your result to the special case where d is infinite and compare it with Eq. (4.25).

Solution:

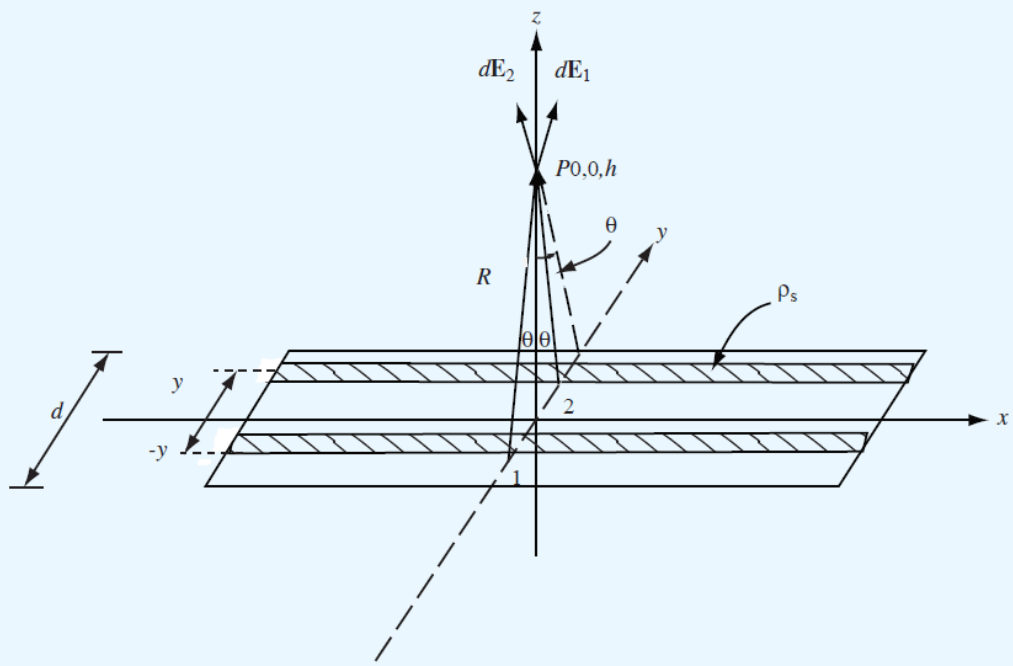

Figure P4.21 Horizontal strip of charge.

The strip of charge density ρ_s (C/m^2) can be treated as a set of adjacent line charges each of charge $\rho_l = \rho_s\, dy$ and width dy. At point P, the fields of line charge at distance y and line charge at distance $-y$ give contributions that cancel each other along $\hat{\mathbf{y}}$ and add along $\hat{\mathbf{z}}$. For each such pair,

$$d\mathbf{E} = \hat{\mathbf{z}}\,\frac{2\rho_s\, dy \cos\theta}{2\pi\varepsilon_0 R}\,.$$

Apply Eq. (4.33):
- for 2 line charges
- $\rho_l = \rho_s\, dy$
- for the component of **E** in the z-dir

With $R = h/\cos\theta$, we integrate from $y = 0$ to $d/2$, which corresponds to $\theta = 0$ to $\theta_0 = \sin^{-1}[(d/2)/(h^2 + (d/2)^2)^{1/2}]$. Thus,

$$\mathbf{E} = \int_0^{d/2} d\mathbf{E} = \hat{\mathbf{z}}\,\frac{\rho_s}{\pi\varepsilon_0}\int_0^{d/2}\frac{\cos\theta}{R}\,dy = \hat{\mathbf{z}}\,\frac{\rho_s}{\pi\varepsilon_0}\int_0^{\theta_0}\frac{\cos^2\theta}{h}\cdot\frac{h}{\cos^2\theta}\,d\theta$$

$$= \hat{\mathbf{z}}\,\frac{\rho_s}{\pi\varepsilon_0}\,\theta_0.$$

For an infinitely wide sheet, $\theta_0 = \pi/2$ and $\mathbf{E} = \hat{\mathbf{z}}\,\dfrac{\rho_s}{2\varepsilon_0}$, which is identical with Eq. (4.25).

4.23 Repeat Problem 4.22 for $\mathbf{D} = \hat{\mathbf{x}} xy^3z^3$ (C/m^2).

determine

(a) ρ_v by applying Eq. (4.26).

(b) The total charge Q enclosed in a cube 2 m on a side, located in the first octant with three of its sides coincident with the x-, y-, and z-axes and one of its corners at the origin.

(c) The total charge Q in the cube, obtained by applying Eq. (4.29).

Solution:

(a) From Eq. (4.26), $\rho_v = \nabla \cdot \mathbf{D} = \dfrac{\partial}{\partial x}(xy^3z^3) = y^3z^3$.

(b) Total charge Q is given by Eq. (4.27):

$$Q = \int_{\mathscr{V}} \nabla \cdot \mathbf{D}\, d\mathscr{V} = \int_{z=0}^{2}\int_{y=0}^{2}\int_{x=0}^{2} y^3z^3\, dx\, dy\, dz = \frac{xy^4z^4}{16}\bigg|_{x=0}^{2}\bigg|_{y=0}^{2}\bigg|_{z=0}^{2} = 32 \text{ C}.$$

(c) Using Gauss' law we have

$$\oint_S \mathbf{D} \cdot d\mathbf{s} = F_{\text{front}} + F_{\text{back}} + F_{\text{right}} + F_{\text{left}} + F_{\text{top}} + F_{\text{bottom}}.$$

Note that $\mathbf{D} = \hat{\mathbf{x}} D_x$, so only F_{front} and F_{back} (integration over $\hat{\mathbf{z}}$ surfaces) will contribute to the integral.

$$F_{\text{front}} = \int_{z=0}^{2}\int_{y=0}^{2} (\hat{\mathbf{x}} xy^3z^3)\bigg|_{x=2} \cdot (\hat{\mathbf{x}}\, dy\, dz)$$

$$= \int_{z=0}^{2}\int_{y=0}^{2} xy^3z^3\bigg|_{x=2} dy\, dz = \left(2\left(\frac{y^4z^4}{16}\right)\bigg|_{y=0}^{2}\right)\bigg|_{z=0}^{2} = 32\,,$$

$$F_{\text{back}} = \int_{z=0}^{2}\int_{y=0}^{2} (\hat{\mathbf{x}} xy^3z^3)\bigg|_{x=0} \cdot (-\hat{\mathbf{x}}\, dy\, dz) = -\int_{z=0}^{2}\int_{y=0}^{2} xy^3z^3\bigg|_{x=0} dy\, dz = 0.$$

Thus $Q = \oint \mathbf{D} \cdot d\mathbf{s} = 32 + 0 + 0 + 0 + 0 + 0 = 32$ C.

4.25 The electric flux density inside a dielectric sphere of radius a centered at the origin is given by

$$\mathbf{D} = \hat{\mathbf{R}} \rho_0 R \qquad (\text{C/m}^2)$$

where ρ_0 is a constant. Find the total charge inside the sphere.

Solution:

$$Q = \oint_S \mathbf{D} \cdot d\mathbf{s} = \int_{\theta=0}^{\pi} \int_{\phi=0}^{2\pi} \hat{\mathbf{R}} \rho_0 R \cdot \hat{\mathbf{R}} R^2 \sin\theta \, d\theta \, d\phi \Big|_{R=a}$$

$$= 2\pi\rho_0 a^3 \int_0^{\pi} \sin\theta \, d\theta = -2\pi\rho_0 a^3 \cos\theta \Big|_0^{\pi} = 4\pi\rho_0 a^3 \qquad \text{(C)}.$$

4.27 An infinitely long cylindrical shell extending between $r = 1$ m and $r = 3$ m contains a uniform charge density ρ_{v0}. Apply Gauss's law to find $\mathbf{D}$ in all regions.

Solution: For $r < 1$ m, $\mathbf{D} = 0$.

For $1 \le r \le 3$ m,

$$\oint_S \hat{\mathbf{r}} D_r \cdot d\mathbf{s} = Q,$$

$$D_r \cdot 2\pi r L = \rho_{v0} \cdot \pi L (r^2 - 1^2),$$

$$\mathbf{D} = \hat{\mathbf{r}} D_r = \hat{\mathbf{r}} \frac{\rho_{v0} \pi L (r^2 - 1)}{2\pi r L} = \hat{\mathbf{r}} \frac{\rho_{v0}(r^2 - 1)}{2r}, \qquad 1 \le r \le 3 \text{ m}.$$

For $r \ge 3$ m,

$$D_r \cdot 2\pi r L = \rho_{v0} \pi L (3^2 - 1^2) = 8\rho_{v0}\pi L,$$

$$\mathbf{D} = \hat{\mathbf{r}} D_r = \hat{\mathbf{r}} \frac{4\rho_{v0}}{r}, \qquad r \ge 3 \text{ m}.$$

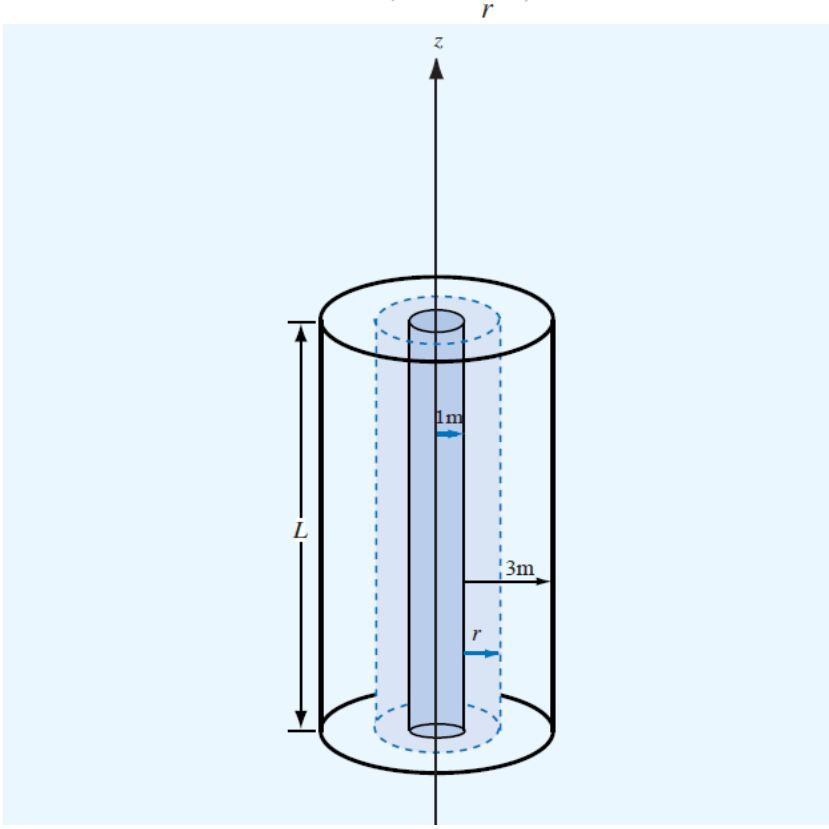

4.30 A square in the x–y plane in free space has a point charge of $+Q$ at corner $(a/2, a/2)$, the same at corner $(a/2, -a/2)$, and a point charge of $-Q$ at each of the other two corners.

(a) Find the electric potential at any point P along the x-axis.

(b) Evaluate V at $x = a/2$.

Solution: $R_1 = R_2$ and $R_3 = R_4$.

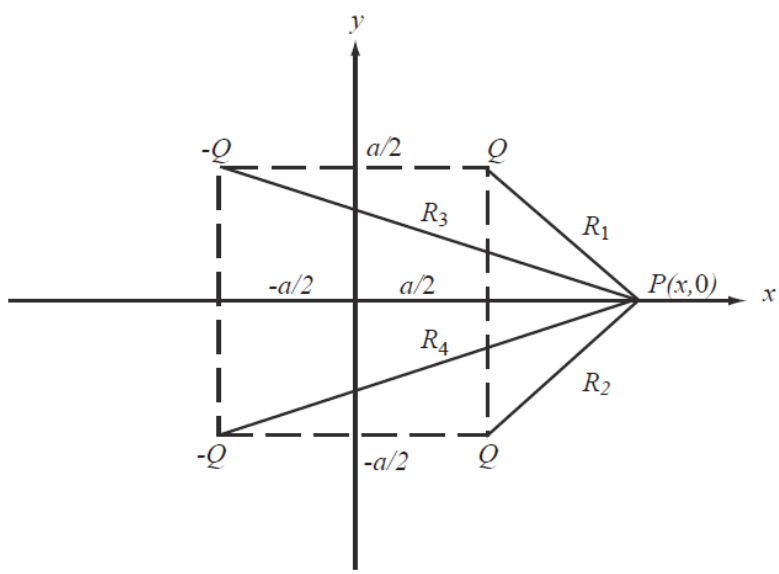

Figure P4.30: Potential due to four point charges.

$$V = \frac{Q}{4\pi\varepsilon_0 R_1} + \frac{Q}{4\pi\varepsilon_0 R_2} + \frac{-Q}{4\pi\varepsilon_0 R_3} + \frac{-Q}{4\pi\varepsilon_0 R_4} = \frac{Q}{2\pi\varepsilon_0}\left(\frac{1}{R_1} - \frac{1}{R_3}\right)$$

with

$$R_1 = \sqrt{\left(x - \frac{a}{2}\right)^2 + \left(\frac{a}{2}\right)^2},$$

$$R_3 = \sqrt{\left(x + \frac{a}{2}\right)^2 + \left(\frac{a}{2}\right)^2}.$$

At $x = a/2$,

$$R_1 = \frac{a}{2},$$

$$R_3 = \frac{a\sqrt{5}}{2},$$

$$V = \frac{Q}{2\pi\varepsilon_0}\left(\frac{2}{a} - \frac{2}{\sqrt{5}\,a}\right) = \frac{0.55Q}{\pi\varepsilon_0 a}.$$

4.35 For the electric dipole shown in Fig. 4-13, $d = 1$ cm and $|\mathbf{E}| = 4$ (mV/m) at $R = 1$ m and $\theta = 0°$. Find $\mathbf{E}$ at $R = 2$ m and $\theta = 90°$.

Solution: For $R = 1$ m and $\theta = 0°$, $|\mathbf{E}| = 4$ mV/m, we can solve for q using Eq. (4.56):

$$\mathbf{E} = \frac{qd}{4\pi\varepsilon_0 R^3}(\hat{\mathbf{R}}2\cos\theta + \hat{\boldsymbol{\theta}}\sin\theta).$$

Hence,

$$|\mathbf{E}| = \left(\frac{qd}{4\pi\varepsilon_0}\right)2 = 4 \text{ mV/m} \quad \text{at } \theta = 0°,$$

$$q = \frac{10^{-3} \times 8\pi\varepsilon_0}{d} = \frac{10^{-3} \times 8\pi\varepsilon_0}{10^{-2}} = 0.8\pi\varepsilon_0 \qquad \text{(C)}.$$

Again using Eq. (4.56) to find $\mathbf{E}$ at $R = 2$ m and $\theta = 90°$, we have

$$\mathbf{E} = \frac{0.8\pi\varepsilon_0 \times 10^{-2}}{4\pi\varepsilon_0 \times 2^3}(\hat{\mathbf{R}}(0) + \hat{\boldsymbol{\theta}}) = \hat{\boldsymbol{\theta}}\,\frac{1}{4} \qquad \text{(mV/m)}.$$

4.39 An infinitely long line of charge with uniform density $\rho_l = 9$ (nC/m) lies in the x–y plane parallel to the y-axis at $x = 2$ m. Find the potential V_{AB} at point $A(3\text{ m}, 0, 4\text{ m})$ in Cartesian coordinates with respect to point $B(0,0,0)$ by applying the result of Problem 4.33.

Solution: According to Problem 4.33,

$$V = \frac{\rho_l}{2\pi\varepsilon_0}\ln\left(\frac{r_2}{r_1}\right)$$

where r_1 and r_2 are the distances of A and B. In this case,

$$r_1 = \sqrt{(3-2)^2 + 4^2} = \sqrt{17} \text{ m},$$

$$r_2 = 2 \text{ m}.$$

Hence,

$$V_{AB} = \frac{9 \times 10^{-9}}{2\pi \times 8.85 \times 10^{-12}}\ln\left(\frac{2}{\sqrt{17}}\right) = -117.09 \text{ V}.$$

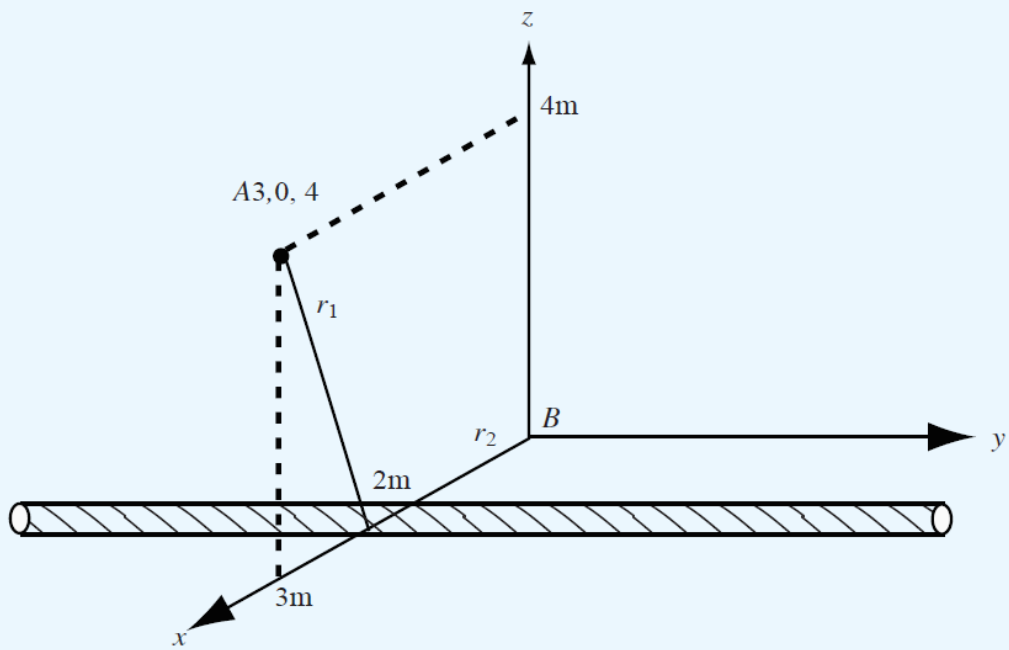

Figure P4.39 Line of charge parallel to y-axis.

4.40 The x–y plane contains a uniform sheet of charge with $\rho_{s_1} = 0.2$ (nC/m^2). A second sheet with $\rho_{s_2} = -0.2$ (nC/m^2) occupies the plane $z = 6$ m. Find V_{AB}, V_{BC}, and V_{AC} for $A(0,0,6\text{ m})$, $B(0,0,0)$, and $C(0,-2\text{ m},2\text{ m})$.

Solution: We start by finding the $\mathbf{E}$ field in the region between the plates. For any point above the x–y plane, $\mathbf{E}_1$ due to the charge on x–y plane is, from Eq. (4.25),

$$\mathbf{E}_1 = \hat{\mathbf{z}}\frac{\rho_{s_1}}{2\varepsilon_0}.$$

In the region below the top plate, $\mathbf{E}$ would point downwards for positive ρ_{s_2} on the top plate. In this case, $\rho_{s_2} = -\rho_{s_1}$. Hence,

$$\mathbf{E} = \mathbf{E}_1 + \mathbf{E}_2 = \hat{\mathbf{z}}\frac{\rho_{s_1}}{2\varepsilon_0} - \hat{\mathbf{z}}\frac{\rho_{s_2}}{2\varepsilon_0} = \hat{\mathbf{z}}\frac{2\rho_{s_1}}{2\varepsilon_0} = \hat{\mathbf{z}}\frac{\rho_{s_1}}{\varepsilon_0}.$$

Since $\mathbf{E}$ is along $\hat{\mathbf{z}}$, only change in position along z can result in change in voltage.

$$V_{AB} = -\int_0^6 \hat{\mathbf{z}}\frac{\rho_{s_1}}{\varepsilon_0}\cdot\hat{\mathbf{z}}\,dz = -\frac{\rho_{s_1}}{\varepsilon_0}z\Big|_0^6 = -\frac{6\rho_{s_1}}{\varepsilon_0} = -\frac{6\times 0.2\times 10^{-9}}{8.85\times 10^{-12}} = -135.59\text{ V}.$$

The voltage at C depends only on the z-coordinate of C. Hence, with point A being at the lowest potential and B at the highest potential,

$$V_{BC} = \frac{-2}{6} V_{AB} = -\frac{(-135.59)}{3} = 45.20 \text{ V},$$
$$V_{AC} = V_{AB} + V_{BC} = -135.59 + 45.20 = -90.39 \text{ V}.$$

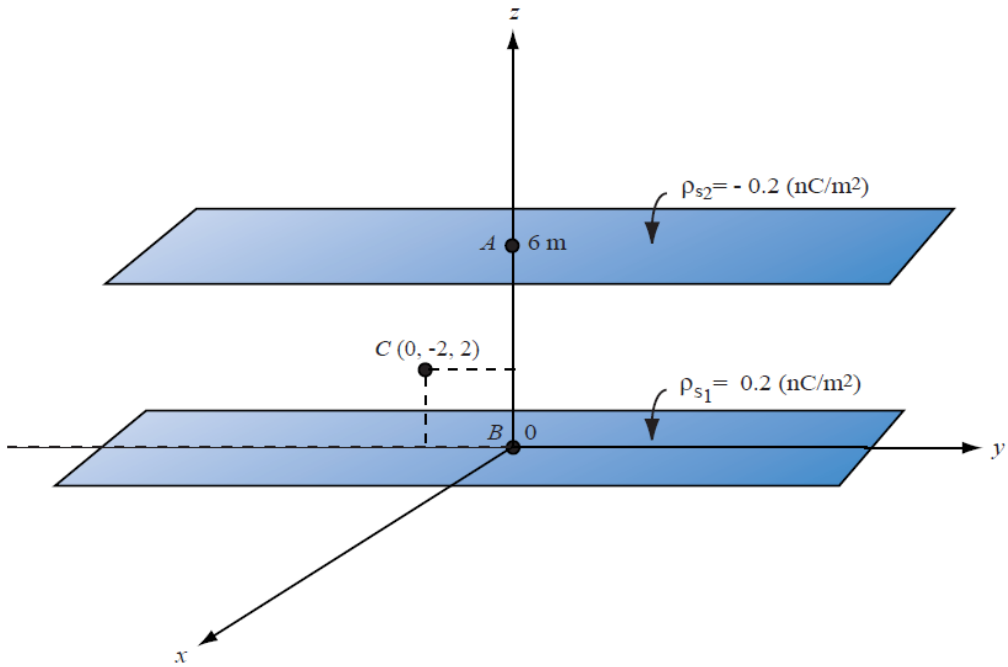

Figure P4.40: Two parallel planes of charge.

Sadiku Chapter 4

4.25. Determine the charge density due to each of the following electric flux densities:

a) $\boldsymbol{D} = 8xy\hat{\boldsymbol{x}} + 4x^2\hat{\boldsymbol{y}}$ C/m^2

b) $\boldsymbol{D} = 4r sin\phi\hat{\boldsymbol{r}} + 2r cos\phi\hat{\boldsymbol{\phi}} + 2z^2\hat{\boldsymbol{z}}$ C/m^2

c) $\boldsymbol{D} = \frac{2cos\theta}{R^3}\hat{\boldsymbol{R}} + \frac{sin\theta}{R^3}\hat{\boldsymbol{\theta}}$ C/m^2

Solution

a)

$$\rho_v = \nabla \cdot \boldsymbol{D} = \frac{\partial D_x}{\partial x} + \frac{\partial D_y}{\partial y} + \frac{\partial D_z}{\partial z} = 8y \text{ C/m}^3$$

b)

$$\rho_v = \nabla \cdot \boldsymbol{D} = \frac{1}{r}\frac{\partial}{\partial r}(rD_r) + \frac{1}{r}\frac{\partial D_\phi}{\partial \phi} + \frac{\partial D_z}{\partial z}$$
$$= 8sin\phi - 2sin\phi + 4z = 6sin\phi + 4z \text{ C/m}^3$$

c)

$$\rho_v = \nabla \cdot \boldsymbol{D} = \frac{1}{R^2}\frac{\partial}{\partial R}(R^2 D_R) + \frac{1}{Rsin\theta}\frac{\partial}{\partial \theta}(D_\theta sin\theta) + 0$$
$$= -\frac{2}{R^4}cos\theta + \frac{2cos\theta}{R^4} = 0$$

4.29. Let $\boldsymbol{D} = 2xy\hat{\boldsymbol{x}} + x^2\hat{\boldsymbol{y}}$ C/m^2 and find

a) The volume charge density ρ_v,
b) The flux through surface $0 < x < 1, 0 < z < 1, y = 1$.
c) The total charge contained in the region $0 < x < 1, 0 < y < 1, 0 < z < 1$.

Solution

a)

$$\rho_v = \nabla \cdot \boldsymbol{D} = \frac{\partial D_x}{\partial x} + \frac{\partial D_y}{\partial y} + \frac{\partial D_z}{\partial z} = 2y\frac{\mathrm{C}}{\mathrm{m}^3}$$

b)

$$\psi = \int_s \boldsymbol{D} \cdot d\boldsymbol{S} = \iint x^2 dxdz \Big|_{y\,=\,1} = \int_{x=0}^{1} x^2 dx \int_{z=0}^{1} dz = \frac{1}{3}\ \mathrm{C}$$

c)

$$Q = \int_v \rho_v dv = \iiint 2ydxdydz = 2\int_{x=0}^{1} dx \int_{y=0}^{1} ydy \int_{z=0}^{1} dz = 1\ \mathrm{C}$$

4.30. In a certain region, the electric flux density is given by
$\boldsymbol{D} = 2r(z+1)cos\phi\hat{\boldsymbol{r}} - r(z+1)sin\phi\hat{\boldsymbol{\phi}} + r^2cos\phi\hat{\boldsymbol{z}}\ \mu$C/m^2

a) Find the charge density.
b) Calculate the total charge enclosed by the volume $0 < r < 2, 0 < \phi < \frac{\pi}{2},\ 0 < z < 4$.
c) Confirm Gauss's law by finding the net flux through the surface of the volume in b).

Solution

a)

$$\rho_v = \nabla \cdot \boldsymbol{D} = \frac{1}{r}\frac{\partial}{\partial r}(rD_r) + \frac{1}{r}\frac{\partial D_\phi}{\partial \phi} + \frac{\partial D_z}{\partial z}$$
$$= 4(z+1)cos\phi - (z+1)cos\phi + 0$$
$$= 3(z+1)cos\phi\ \mu\mathrm{C/m}^3$$

b)

$$Q_{enc} = \int_v \rho_v dv = \iiint 3(z+1)cos\phi\, r d\phi d\rho dz$$
$$= 3\int_0^2 \rho d\rho \int_0^4 (z+1)dz \int_0^{\pi/2} cos\phi d\phi = 3\left(\frac{\rho^2}{2}\Big|_0^2\right)\left(\frac{z^2}{2}+z\right)\Big|_0^4 (sin\phi)\Big|_0^{\pi/2}$$
$$= 3(2)(8+4)(1-0) = 72\ \mu C$$

c) Let $\psi = \psi_1 + \psi_2 + \psi_3 + \psi_4 + \psi_5 = \oint \boldsymbol{D} \cdot d\boldsymbol{S}$ be the total flux that passes through the segment of the cylindrical surface. Here, the fluxes $\psi_1, \psi_2, \psi_3, \psi_4, \psi_5$ pass through the surfaces S_1, S_2, S_3, S_4, S_5, respectively, in the figure below.

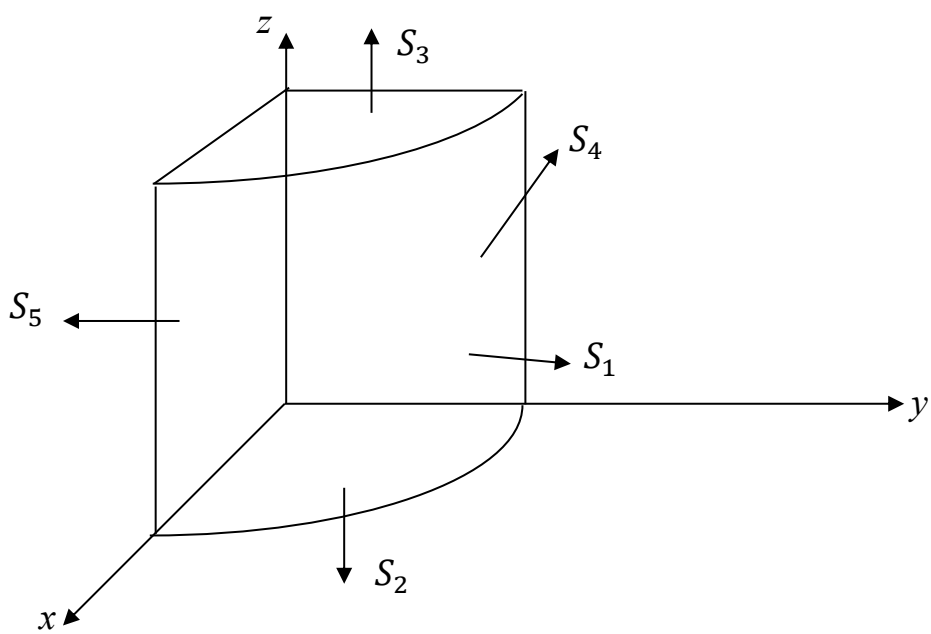

For S_1, $r = 2, d\boldsymbol{s}_r = rd\phi dz\hat{\boldsymbol{r}}$

$$\psi_1 = \iint 2r(z+1)cos\phi ds_r\Big|_{r=2} = 2(2)^2\int_0^4 (z+1)dz\int_0^{\pi/2} cos\phi d\phi$$
$$= 8(12)(1) = 96$$

For $S_2, z = 0, d\boldsymbol{s}_z = rdrd\phi(-\hat{\boldsymbol{z}})$

$$\psi_2 = -\iint r^2 cos\phi\, rdrd\phi = -\int_0^2 r^3 dr\int_0^{\pi/2} cos\phi d\phi$$
$$= -\frac{r^4}{4}\Big|_0^2 (1) = -4$$

For $S_3, z = 4, d\boldsymbol{s}_z = rdrd\phi\hat{\boldsymbol{z}}$

$$\psi_3 = \iint r^2 cos\phi\, rdrd\phi = \int_0^2 r^3 dr\int_0^{\pi/2} cos\phi d\phi$$

$$= \frac{r^4}{4}\Big|_0^2 (1) = 4$$

For $S_4, \phi = \pi/2,\ d\boldsymbol{s}_\phi = drdz\hat{\boldsymbol{\phi}}$

$$\psi_4 = \iint r(z+1)sin\phi\ drdz\Big|_{\phi = \frac{\pi}{2}} = -\left(\sin\frac{\pi}{2}\right)\int_0^2 rdr\int_0^4 (z+1)dz$$

$$= -\frac{r^2}{2}\Big|_0^2 (12) = -(2)(12) = -24$$

For $S_5, \phi = 0, d\boldsymbol{s}_\phi = drdz(-\hat{\boldsymbol{\phi}})$

$$\psi_5 = \iint r(z+1)sin\phi\ drdz\Big|_{\phi\ =\ 0} = 0$$

Therefore, the total flux through the 5 surfaces is

$$\psi = \psi_1 + \psi_2 + \psi_3 + \psi_4 + \psi_5 = 96 - 4 + 4 - 24 + 0 = 72\ \mu\text{C}$$

This is identical to the answer obtained in part b). This confirms Gauss' law that the total electric flux through a closed surface is equal to the charge enclosed.

4.35. Two point charges $Q_1 = 2\ n\text{C}$ and $Q_2 = -4\ n\text{C}$ are located at $(1,0,3)$ and $(-2,1,5)$, respectively. Determine the potential at $P(1,-2,3)$.

Solution

$$V_P = \frac{Q_1}{4\pi\epsilon_0|\boldsymbol{R} - \boldsymbol{R}_1|} + \frac{Q_2}{4\pi\epsilon_0|\boldsymbol{R} - \boldsymbol{R}_2|}$$

$$= \frac{10^{-9}}{4\pi \times \frac{10^{-9}}{36\pi}}\left[\frac{2}{|(1,-2,3) - (1,0,3)|} - \frac{4}{|(1,-2,3) - (-2,1,5)|}\right]$$

$$= 9\left[\frac{2}{2} - \frac{4}{\sqrt{(9+9+4)}}\right] = 1.325\ \text{V}$$

4.37.

a) A total charge $Q = 60\ \mu\text{C}$ is split into two equal charges located at $180°$ intervals around a circular loop of radius 4 m. Find the potential at the center of the loop.

b) If Q is split into three equal charges spaced at $120°$ intervals around the loop, find the potential at the center.

c) If in the limit $\rho_L = \frac{Q}{8\pi}$, find the potential at the center.

Solution

a)

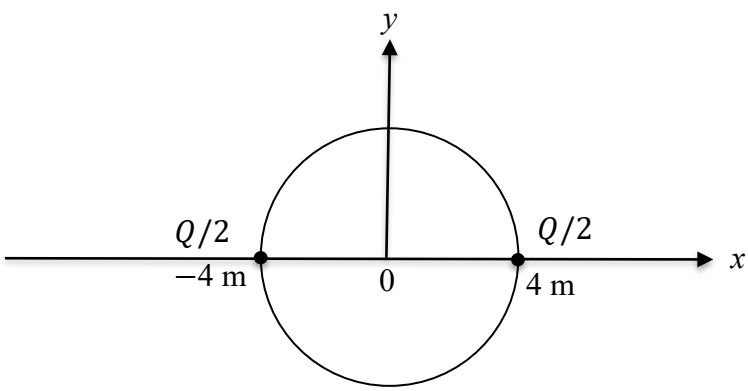

$$V = \frac{\frac{Q}{2}}{4\pi\epsilon_0|\boldsymbol{R}-\boldsymbol{R}_1|} + \frac{\frac{Q}{2}}{4\pi\epsilon_0|\boldsymbol{R}-\boldsymbol{R}_2|}$$

Here, $|\boldsymbol{R}-\boldsymbol{R}_1| = |(0,0,0)-(4,0,0)| = 4$, and $|\boldsymbol{R}-\boldsymbol{R}_2| = |(0,0,0)-(-4,0,0)| = 4$

Therefore,

$$V = \frac{Q}{4\pi\epsilon_0(4)} = \frac{60(10^{-6})}{4\pi \times \frac{10^{-9}}{36\pi}4} = 135\ k\text{V}$$

b) Using a similar reasoning,

$$V = \frac{\frac{Q}{3}}{4\pi\epsilon_0|\boldsymbol{R}-\boldsymbol{R}_1|} + \frac{\frac{Q}{3}}{4\pi\epsilon_0|\boldsymbol{R}-\boldsymbol{R}_2|} + \frac{\frac{Q}{3}}{4\pi\epsilon_0|\boldsymbol{R}-\boldsymbol{R}_3|}$$

Here, $|\boldsymbol{R}-\boldsymbol{R}_1| = |\boldsymbol{R}-\boldsymbol{R}_2| = |\boldsymbol{R}-\boldsymbol{R}_3| = 4$, since all 3 charges are equally spaced around the loop.

Therefore,

$$V = \frac{\frac{3Q}{3}}{4\pi\epsilon_0 4} = 135\ \text{kV}$$

c) For a continuous charge distribution, $R' = |\boldsymbol{R}-\boldsymbol{R}_i|$, and the potential becomes:

$$V = \frac{1}{4\pi\epsilon_0}\int_{l'} \frac{\rho_L}{R'} dl' = \frac{1}{4\pi\epsilon_0}\int_{l'} \frac{\rho_L}{R'} r d\phi' = \frac{\rho_L}{4\pi\epsilon_0 R'}\int_{\phi'=0}^{2\pi} r d\phi' \Big|_{r\,=\,4} = \frac{\rho_L\big(2\pi(4)\big)}{4\pi\epsilon_0 R'}$$

$$= \frac{\frac{Q}{8\pi}2\pi(4)}{4\pi\epsilon_0 4} = \frac{Q}{4\pi\epsilon_0 4} = 135 \text{ kV}$$

4.42. Let charge Q be uniformly distributed on a circular ring defined by $a < r < b$ and shown in the figure below. Find $\boldsymbol{D}$ at $(0,0,h)$.

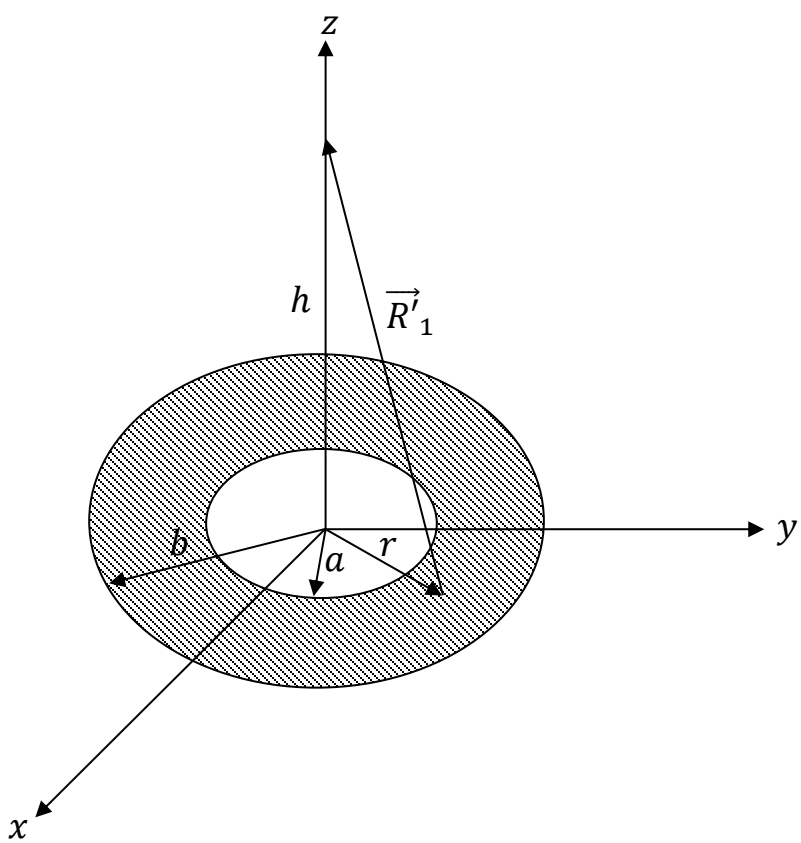

Solution

Coulomb's law, cast in terms of **D** instead of **E** for a surface charge distribution is:

$$\boldsymbol{D} = \frac{1}{4\pi}\int_{S'} \widehat{\boldsymbol{R}}'_{\mathbf{1}} \frac{\rho_s ds'}{R'^2_1} = \frac{1}{4\pi}\int_{S'} \boldsymbol{R}'_{\mathbf{1}} \frac{\rho_s ds'}{R'^3_1}$$

Here,

$$\boldsymbol{R}'_{\mathbf{1}} = -r\hat{\boldsymbol{r}} + h\hat{\boldsymbol{z}}, \quad R'_1 = |\boldsymbol{R}'_{\mathbf{1}}| = \sqrt{r^2 + h^2}, \;\; ds' = ds'_z = r dr d\phi$$

The electric flux density becomes:

$$\boldsymbol{D} = \frac{\rho_s}{4\pi}\int_{S'}(-r\hat{\boldsymbol{r}} + h\hat{\boldsymbol{z}})\frac{rdrd\phi}{(r^2+h^2)^{3/2}}$$

Due to symmetry, the components along the $\hat{\boldsymbol{r}}$ direction cancel, resulting in:

$$\boldsymbol{D} = \frac{\rho_s h}{4\pi}\int_{r=a}^{b}\int_{\phi=0}^{2\pi}\frac{rdrd\phi}{(r^2+h^2)^{3/2}}\hat{\boldsymbol{z}} = \frac{\rho_s h}{4\pi}(2\pi)\int_a^b (r^2+h^2)^{-3/2}rdr\hat{\boldsymbol{z}}$$
$$= \frac{\rho_s h}{2}\left[-\frac{1}{\sqrt{r^2+h^2}}\right]_a^b\hat{\boldsymbol{z}} = \frac{\rho_s h}{2}\left[\frac{1}{\sqrt{a^2+h^2}} - \frac{1}{\sqrt{b^2+h^2}}\right]\hat{\boldsymbol{z}}$$

Since the charge Q is uniformly distributed on the surface area S of the circular ring, defined between $a < r < b$, the surface charge density is given by:

$$\rho_s = \frac{Q}{S} = \frac{Q}{\pi(b^2-a^2)}$$

Finally, **D** at point (0, 0, h) is:

$$\boldsymbol{D} = \frac{Qh}{2\pi(b^2-a^2)}\left[\frac{1}{\sqrt{a^2+h^2}} - \frac{1}{\sqrt{b^2+h^2}}\right]\hat{\boldsymbol{z}}$$

4.50. In free space, $E = 20x\hat{x} + 40y\hat{y} - 10z\hat{z}$ V/m. Calculate the work done in transferring a 2 mC charge along the arc $r = 2, 0 < \phi < \pi/2$ in the $z = 0$ plane.

Solution

The work done is:

$$W = -Q\int_L \boldsymbol{E}\cdot d\boldsymbol{l}$$

In this case, the differential length along the arc is: $d\boldsymbol{l} = rd\phi\hat{\boldsymbol{\phi}}$

We need to therefore convert our given electric field from Cartesian coordinates to cylindrical:

$$\begin{bmatrix} E_r \\ E_\phi \\ E_z \end{bmatrix} = \begin{bmatrix} cos\phi & sin\phi & 0 \\ -sin\phi & cos\phi & 0 \\ 0 & 0 & 1 \end{bmatrix}\begin{bmatrix} E_x \\ E_y \\ E_z \end{bmatrix}$$

Because of the $\boldsymbol{E}\cdot d\boldsymbol{l}$ operation, only the ϕ component of the E-field will survive.

$$E_\phi = E_x sin\phi + E_y cos\phi = -20xsin\phi + 40ycos\phi$$

$$x = rcos\phi, \quad y = rsin\phi$$

$$E_\phi = -20rcos\phi sin\phi + 40rsin\phi cos\phi = 20rcos\phi sin\phi$$

$$W = -Q\int_L \boldsymbol{E}\cdot d\boldsymbol{l} = -2\times 10^{-3}\int_L 20r cos\phi sin\phi r d\phi\Big|_{r\,=\,2}$$

$$W = -2\times 10^{-3}(20)(2)^2\int_0^{\pi/2} cos\phi sin\phi\rho d\phi = -160\times 10^{-3}\left[-\frac{\cos 2\phi}{4}\right]\Big|_0^{\pi/2}$$

$$= \frac{-160\times 10^{-3}}{4}[-1-1] = -80\text{ mJ}$$

4.56. A uniform surface charge with density ρ_s exists on a hemispherical surface with $R' = a$ and $\theta \le \pi/2$. Calculate the electric potential at the center.

Solution

The potential due to a uniform surface charge density is given by:

$$\boldsymbol{V} = \frac{1}{4\pi\varepsilon}\int_{S'}\frac{\rho_s ds'}{R'}$$

Here, $ds' = ds_R{}' = R'^2 sin\theta d\theta d\phi$, and V becomes:

$$V = \frac{\rho_S}{4\pi\varepsilon_0}\int_{\phi=0}^{2\pi}\int_{\theta=0}^{\pi/2}\frac{R'^2 sin\theta d\theta d\phi}{R'} = \frac{\rho_S}{4\pi\varepsilon_0 R'}(2\pi)\int_0^{\pi/2} sin\theta d\theta$$

$$= \frac{\rho_S}{2\varepsilon_0 R'}\left(-cos\theta\Big|_0^{\pi/2}\right)\Big|_{R'\,=\,a}$$

$$V = \frac{\rho_S}{2\varepsilon_0 a}$$